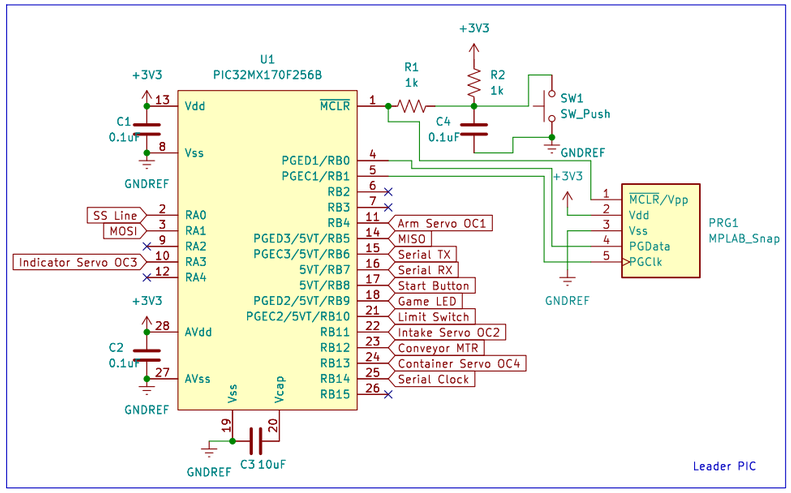


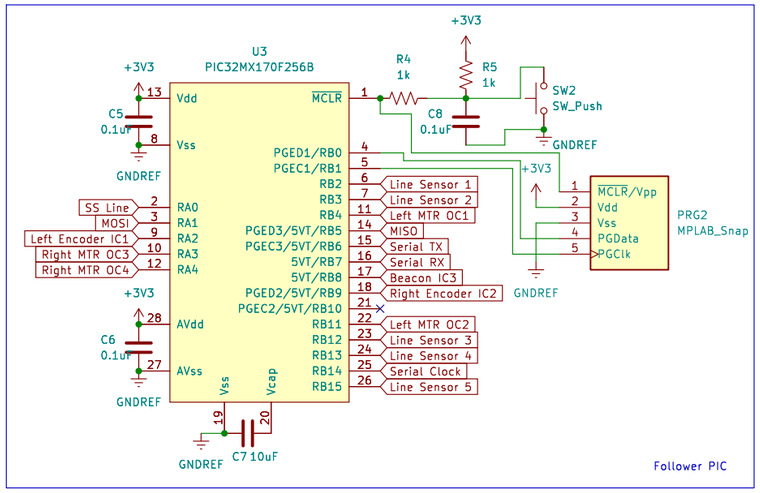


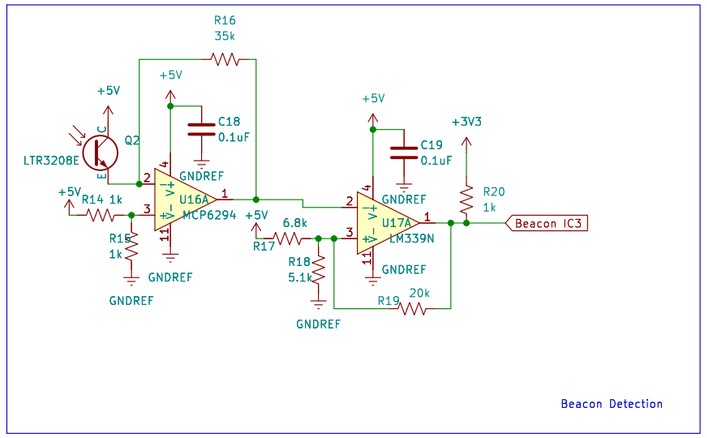


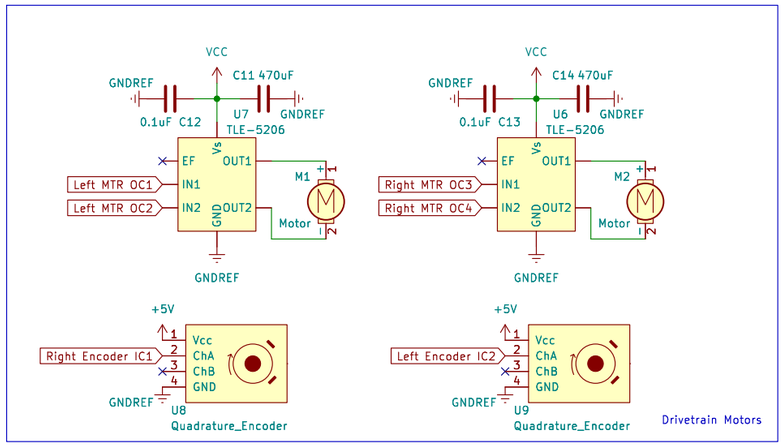


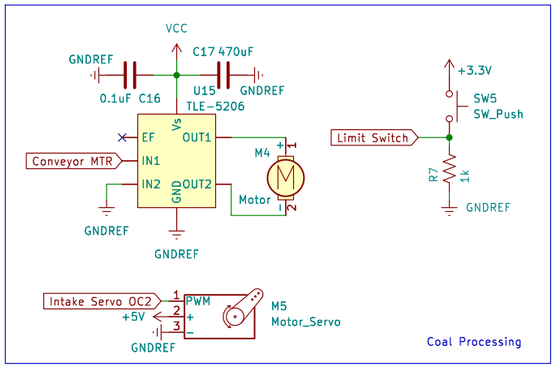


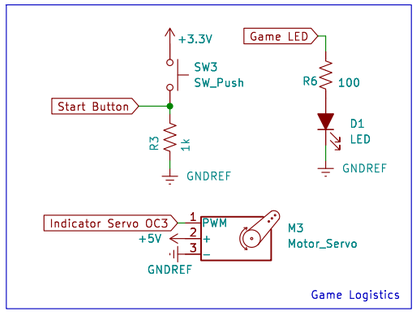


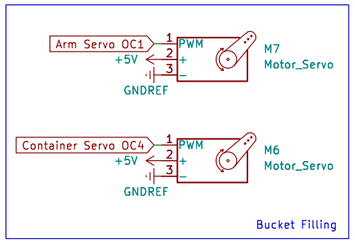


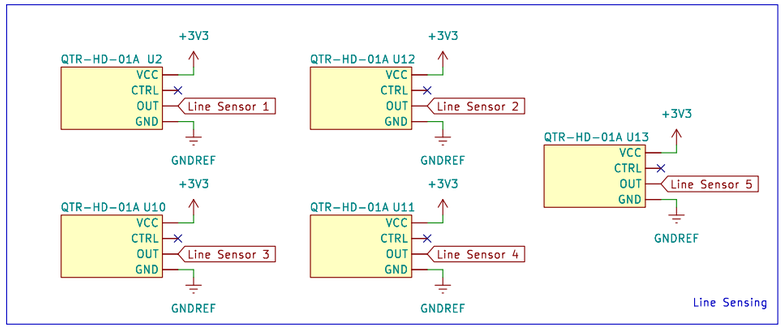


| | | |
|---|---|---|
| Sheet: / | | |
| File: Project.kicad_sch | | |
| **Title: ME218B Project Schematic** | | |
| Size: A3 | Date: 2026-03-10 | Rev: 02 |
| KiCad E.D.A. eeschema 7.0.11 | | Id: 1/1 |